260 North Elm Street - Westfield, MA 01089
413.568.9571 fax 413.568.1178

MULTIPLE BOILERS PRIMARY/SECONDARY VARIABLE LOW TEMP SYSTEM

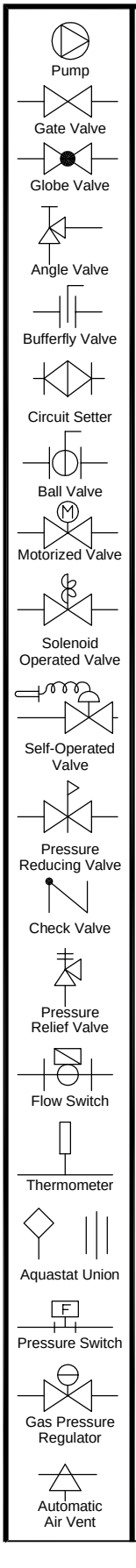

Boiler connection Pipe Sizing and Heat Exchanger Configuration

Heater Model	Pipe size **NPS**	Configurations
50-400	$1^1/_2$"	Two Pass
420-1900	$2^1/_2$"	Two Pass
2000-4000	3"	Two Pass
Dominator	$2^1/_2$"	Two Pass
Futera	$2^1/_2$"	Four Pass

SELF ACTIVATING VALVE SETTINGS
105°F ATMOSPHERIC
140°F SEALED COMBUSTION

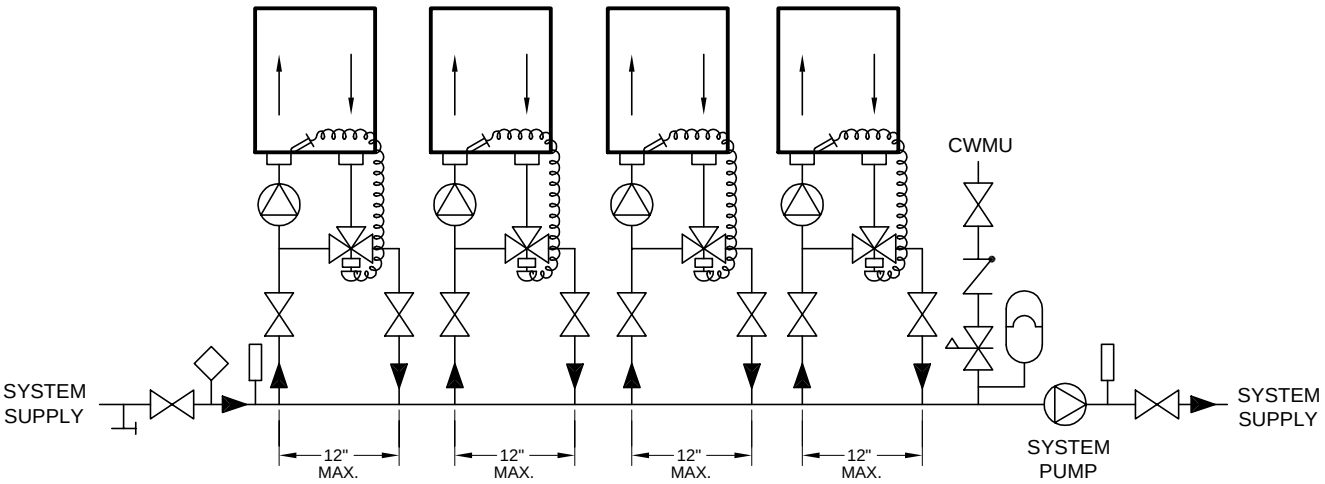

NOTES:

1. Primary/Secondary required for variable flow systems.
2. Boiler circuit piping must equal boiler connection size.
3. Boiler Pump sized to boiler design flow requirements.
4. Boiler water connection (inlet/outlet) vary per model. Verify connection orientation.
5. All boilers furnished with factory mounted outlet water temperature gauge.
6. Dotted symbols indicate optional locations.
7. Boiler Pump requires system temp Interlocks.
8. CWMU = Cold Water Make-Up.
9. Temperature sensors require field interlocks to boiler control.

Notice: This drawing shows suggested piping configuration and valving. Check with local codes and ordinances for additional requirements.